NEISCO OMEGA

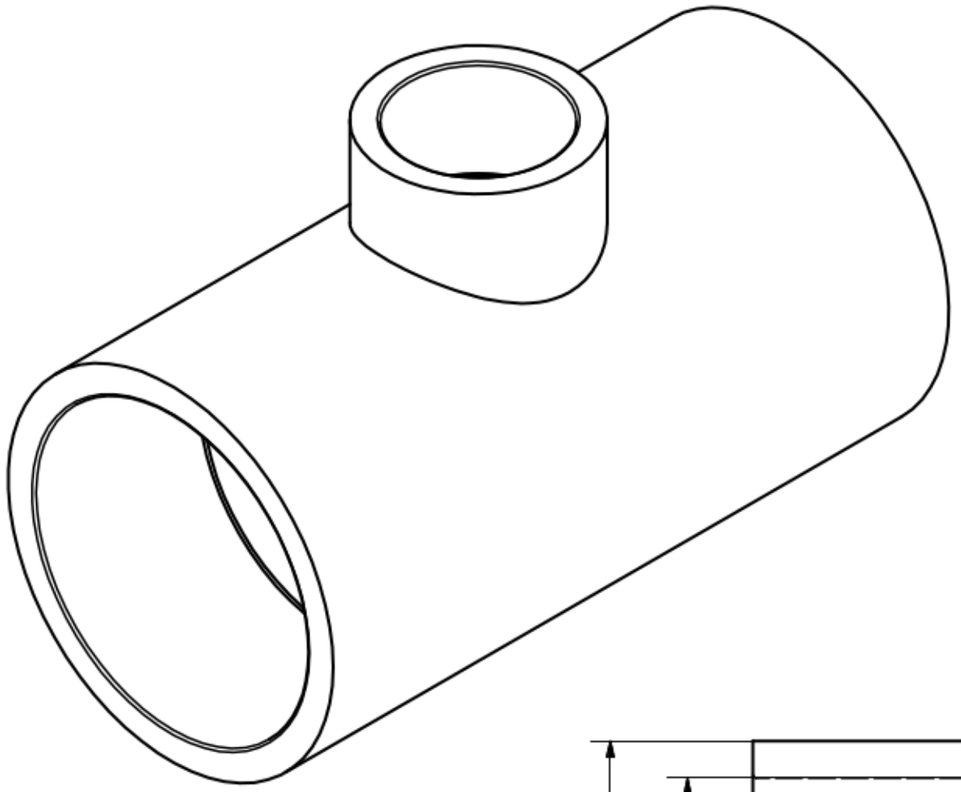

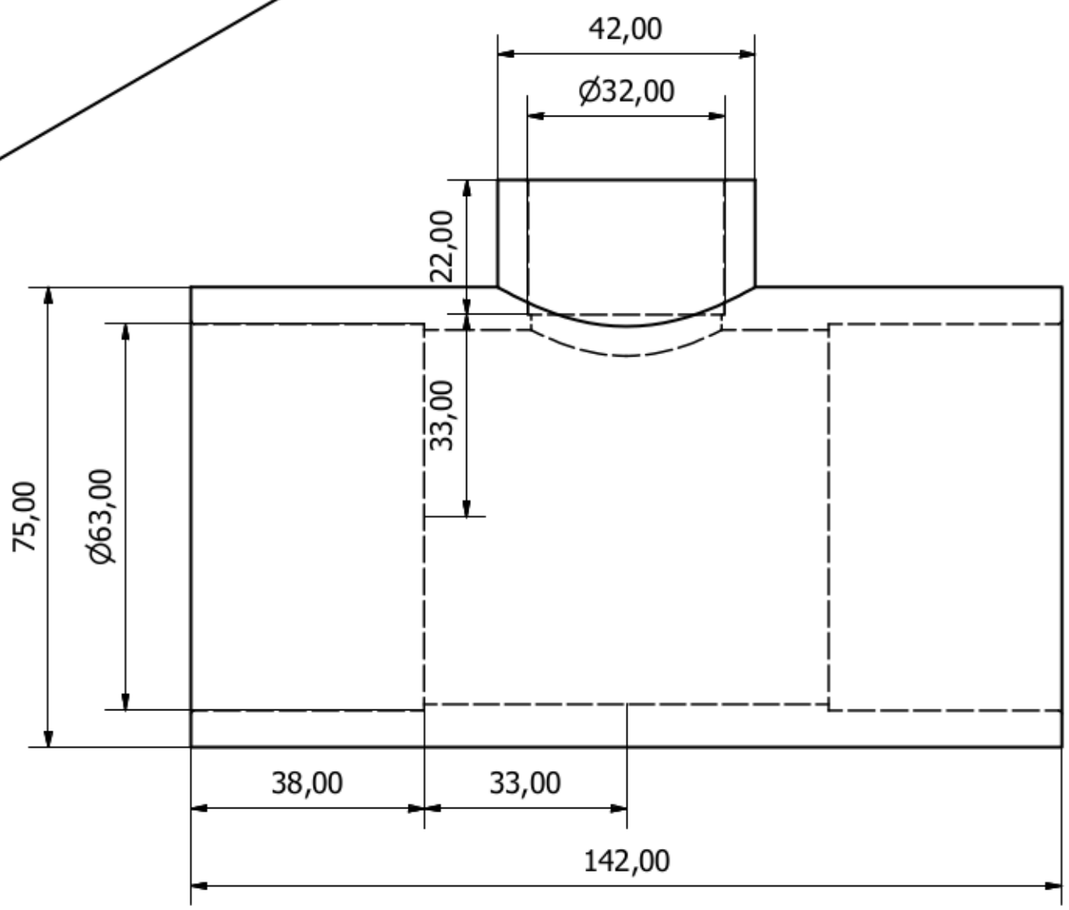

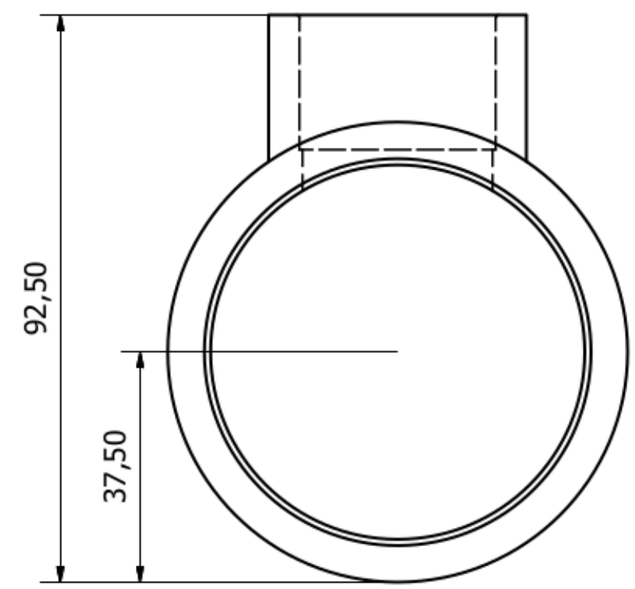

TR40N063D