NEISCO OMEGA

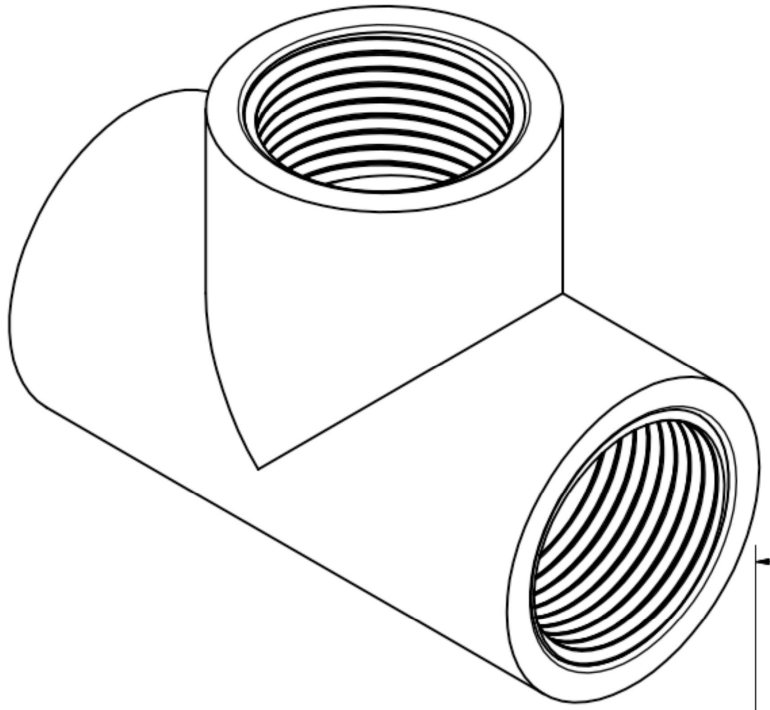

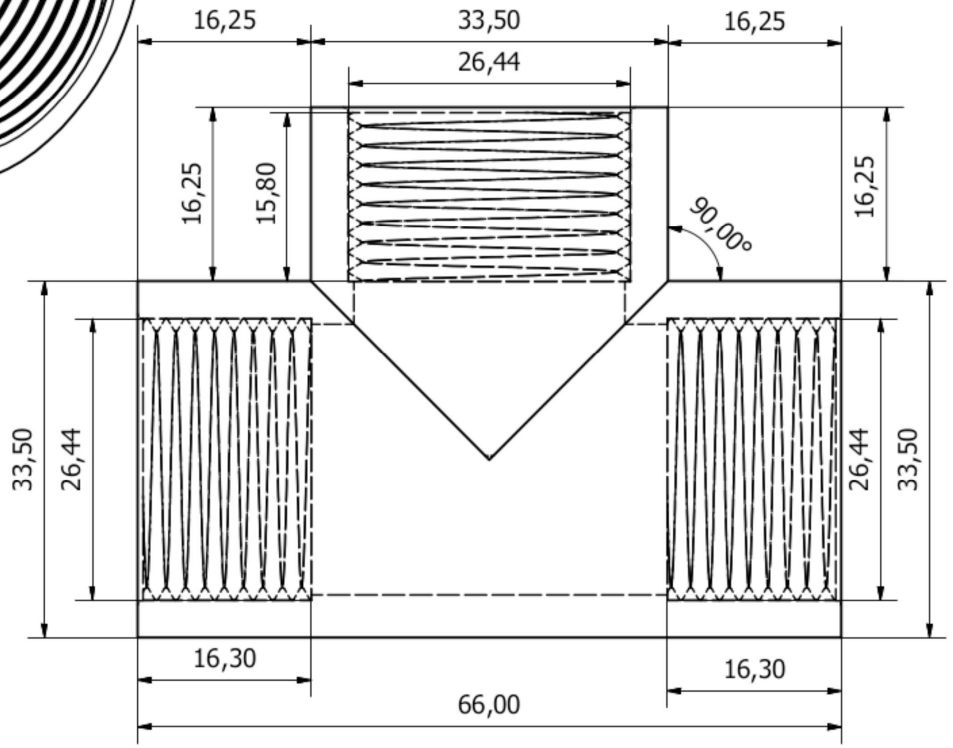

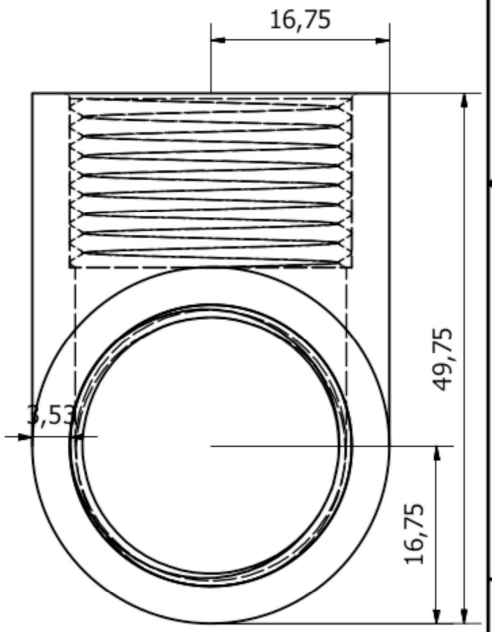

TE41N0250