NEISCO OMEGA

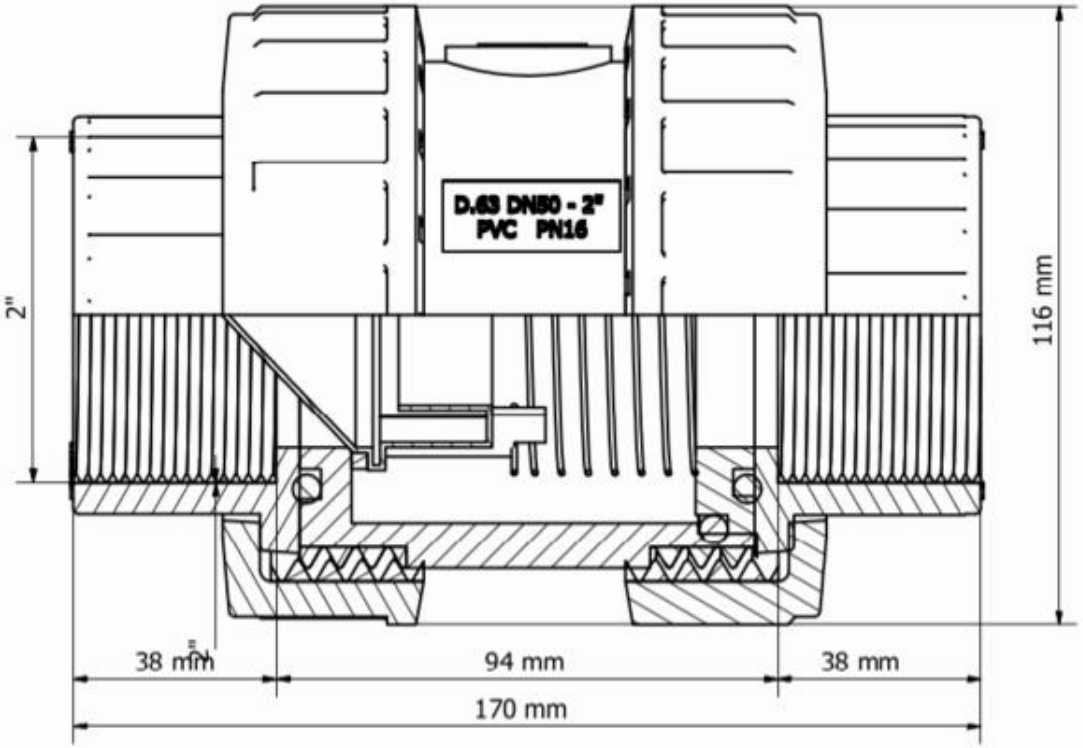

CVD11N0630